ROBOT ARM

by VBH
VAN BERGE HENEGOUWEN

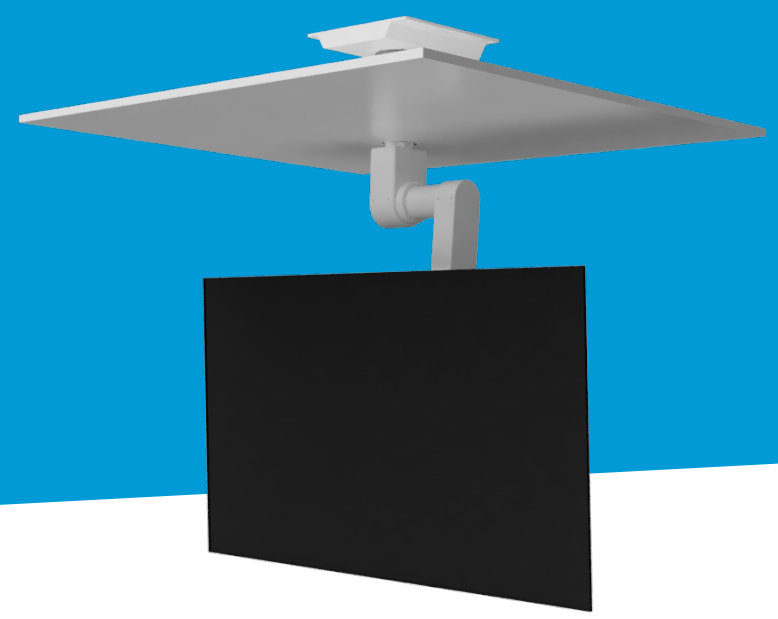

More info

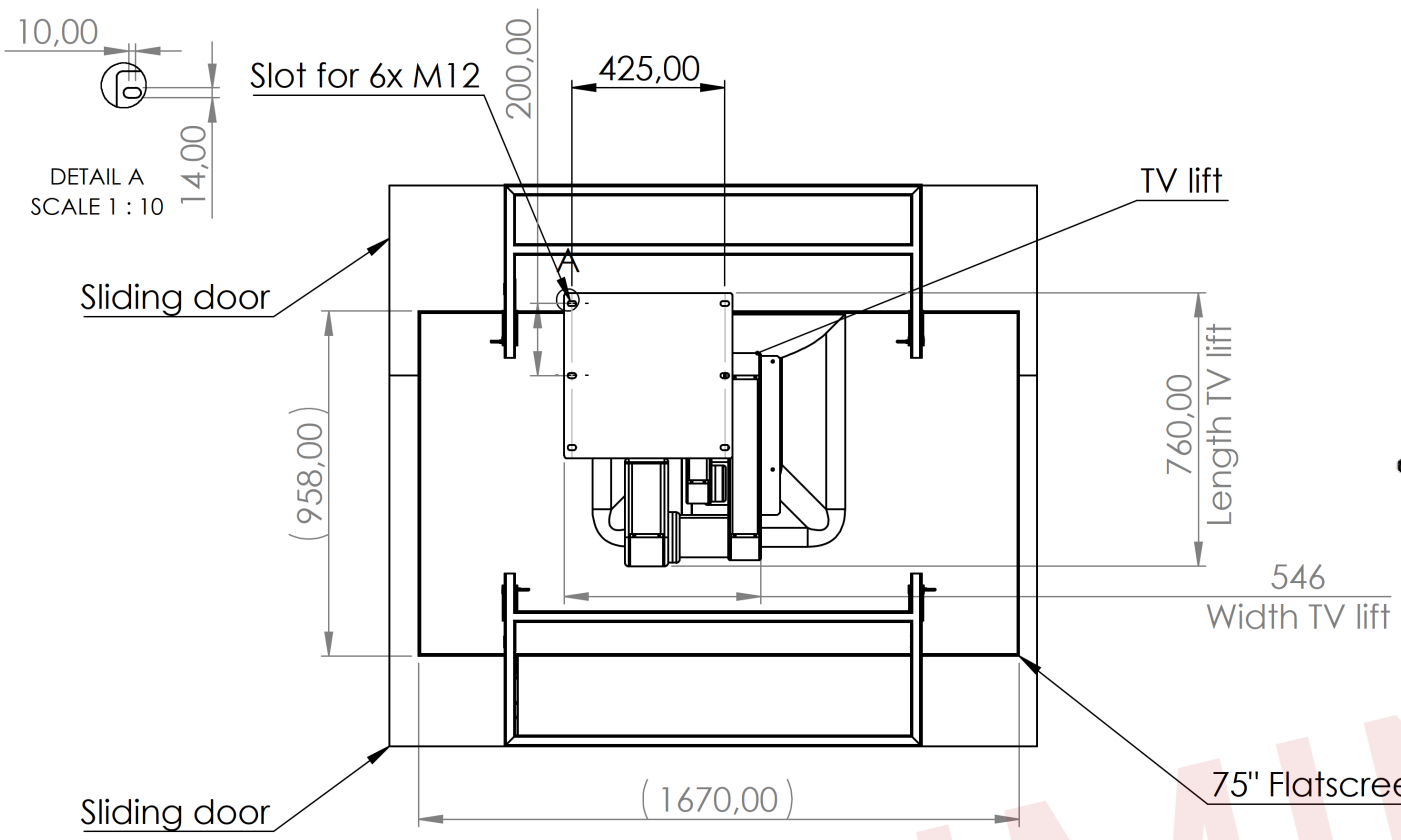

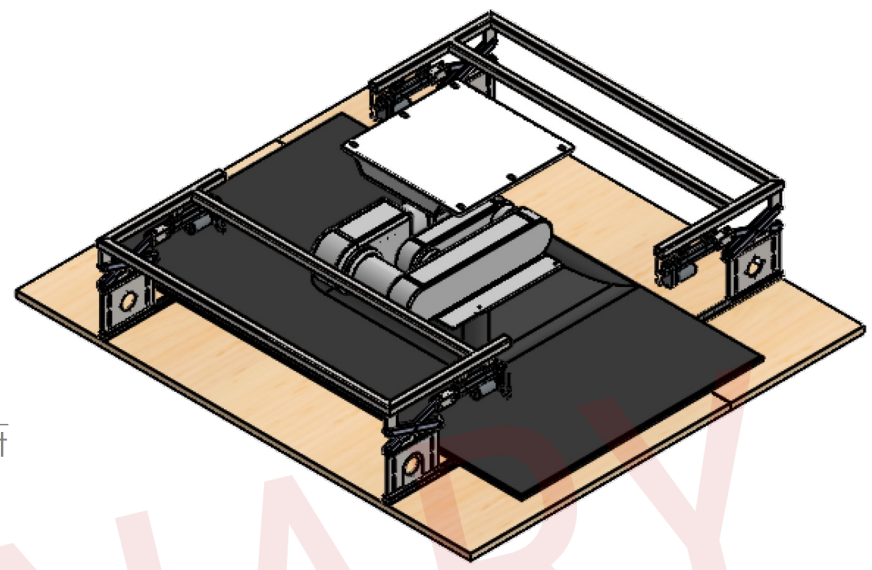

PRELIMINARY

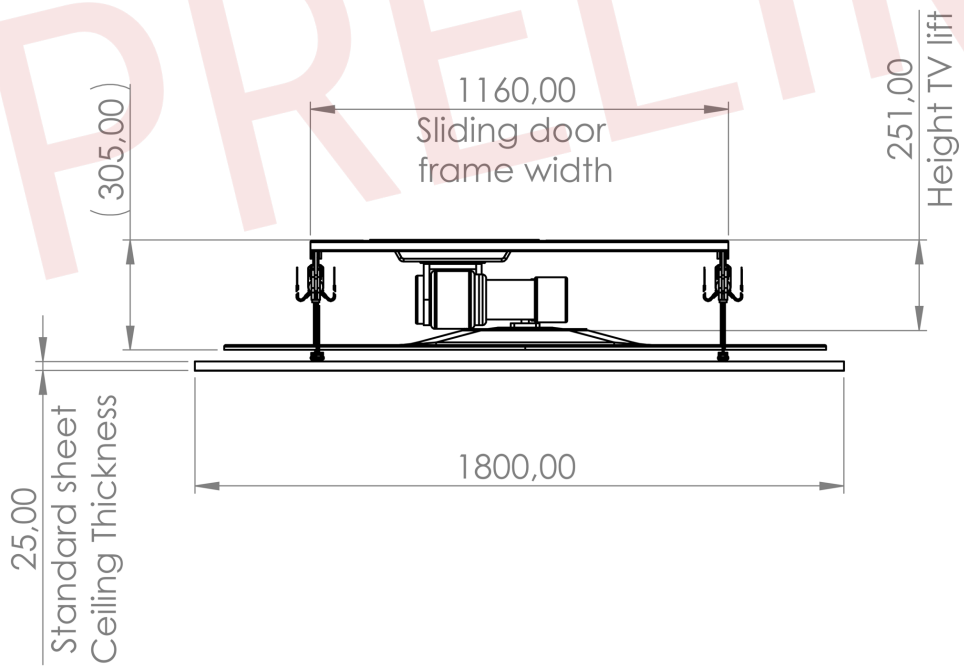

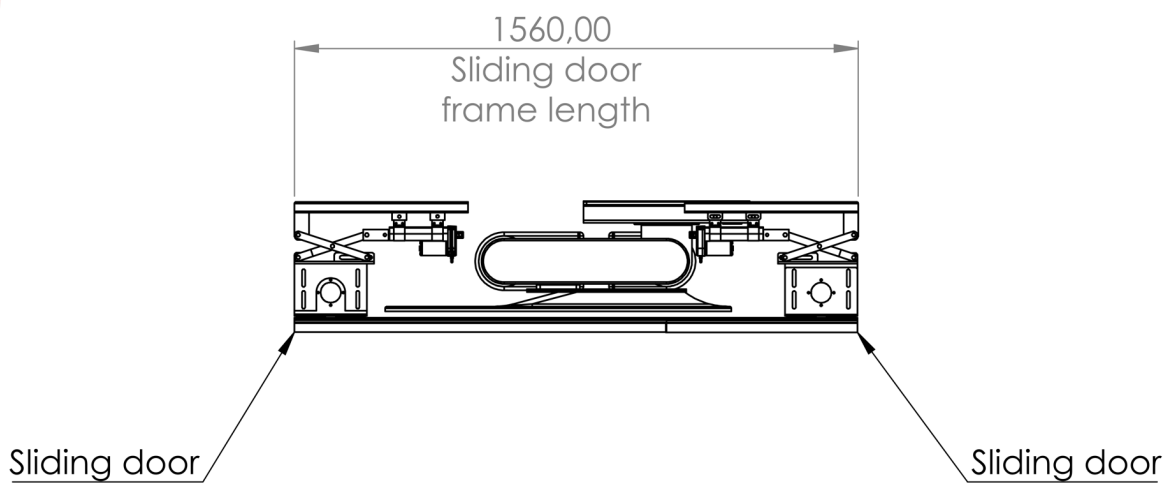

PHYSICAL

Dimensions above ceiling	1670x1560x305 mm	65.7x61.4x12.0 inch
Dimensions sliding door	1800x1560x25 mm	70.9x61.4x1 inch
Arm base	450x450 mm (6xM12)	17.7x17.7 inch
Weight complete arm	120 kg (without display)	
Max. display size	75” diagonal	
Max. display weight	35 kg	
Max. weight closing panel	20 kg (each)	
Standard finish arm	Black or white powdercoat	Other colors, finishes on request

ELECTRICAL

Max. power consumption	230VAC 2000W	
Operation power consumption	Still position 50W	In motion 750W
Control	Pivot, Remote, Service panel	
Operating sequence	Opening in < 30 sec	Closing in <30 sec
Max. vertical speed	90 degrees in 15 sec	
Max. horizontal speed (swivel)	90 degrees in 10 sec	
Cable management	In arm	

The information and specifications contained in this brochure are for information purposes only and are subject to change without prior notice.

Van Berge Henegouwen
Pieter-Braaijweg 1, 1114 AJ Amsterdam – Duivendrecht (NL)
+31 20 799 3700 | info@vbhi.com